Ultrapin
Detailed I/O Wiring Diagram
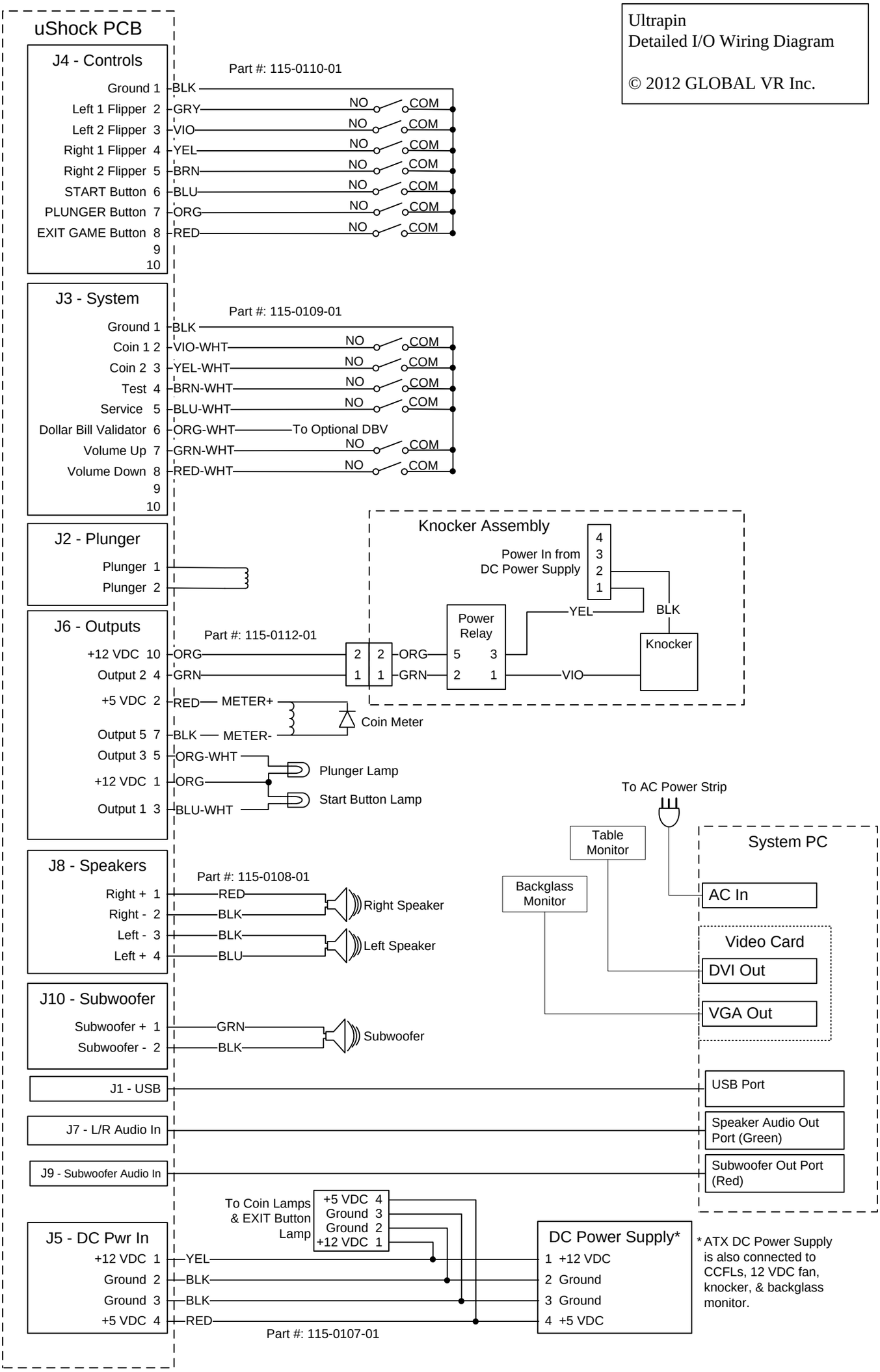
© 2012 GLOBAL VR Inc.