Underground Simplified I/O Wiring Diagram

© 2012 GLOBAL VR Inc.

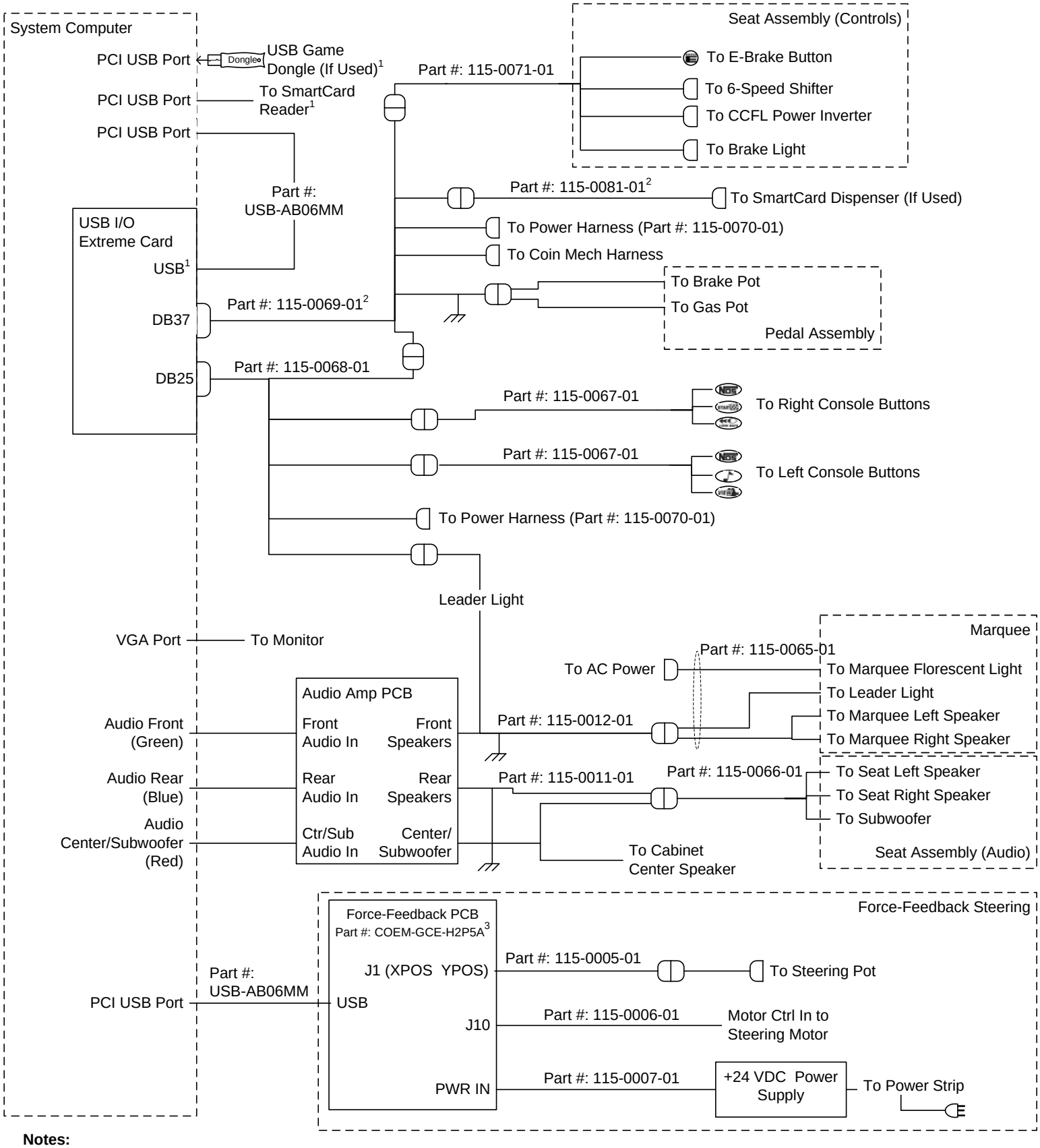


**Notes:**

[1]If a 2-port PCI USB card is installed, the SmartCard Reader, USB Port on USB I/O Extreme Board, and USB Game Dongle will connect through a USB Hub.

[2]Part numbers 115-0069-01 and 115-0081-01 can be replaced with 115-0084-01. (Do not use 115-0081-01 with 115-0084-01.)

[3]Some cabinets have a dual PCB force-feedback steering system, PCB part #s COEM-6040-245 and COEM-6052 with ribbon cable.