NASCAR Team Racing Deluxe Cabinet Simplified I/O Wiring Diagram
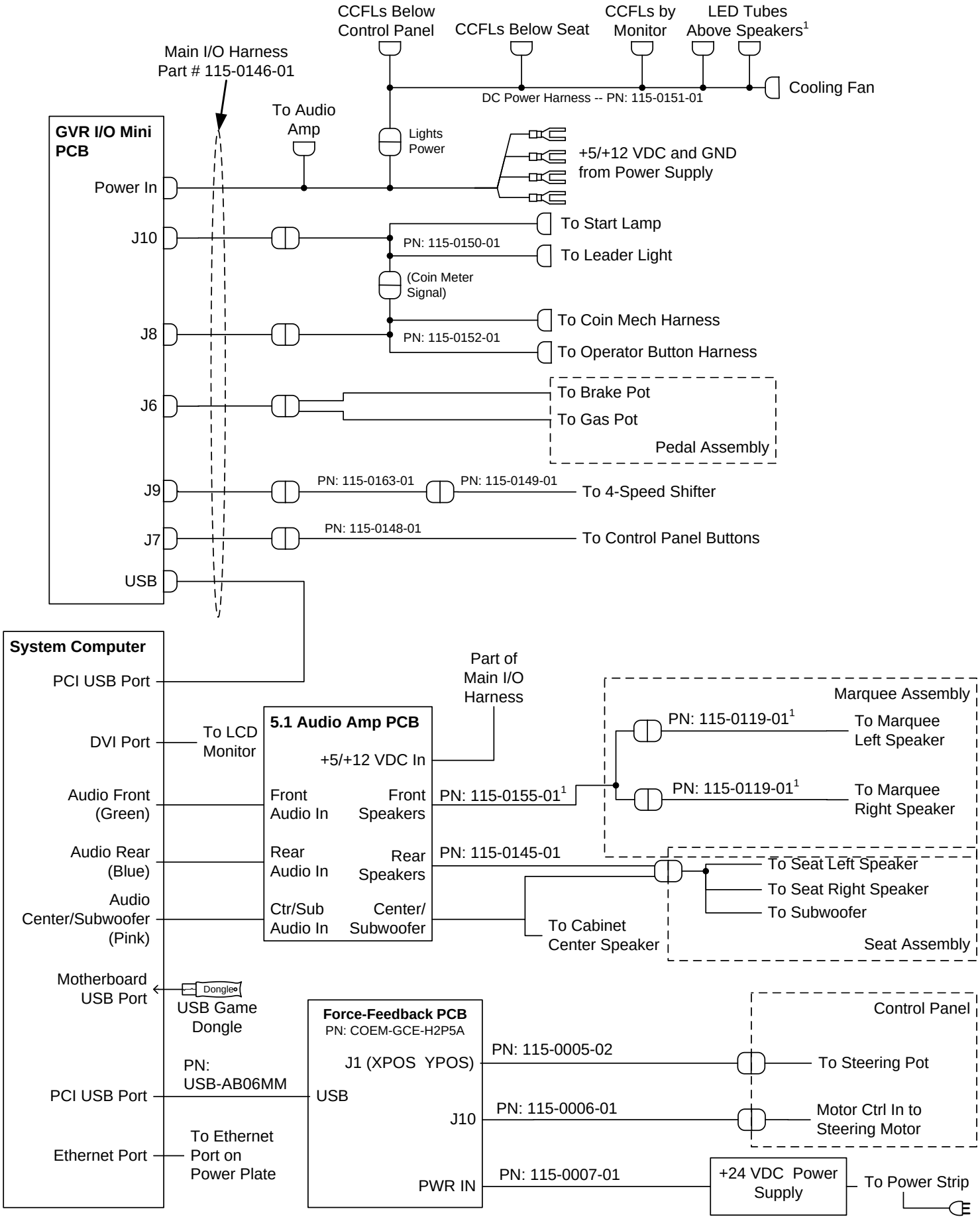
© 2012 GLOBAL VR Inc.