PGA Tour Golf
Power Distribution Diagram
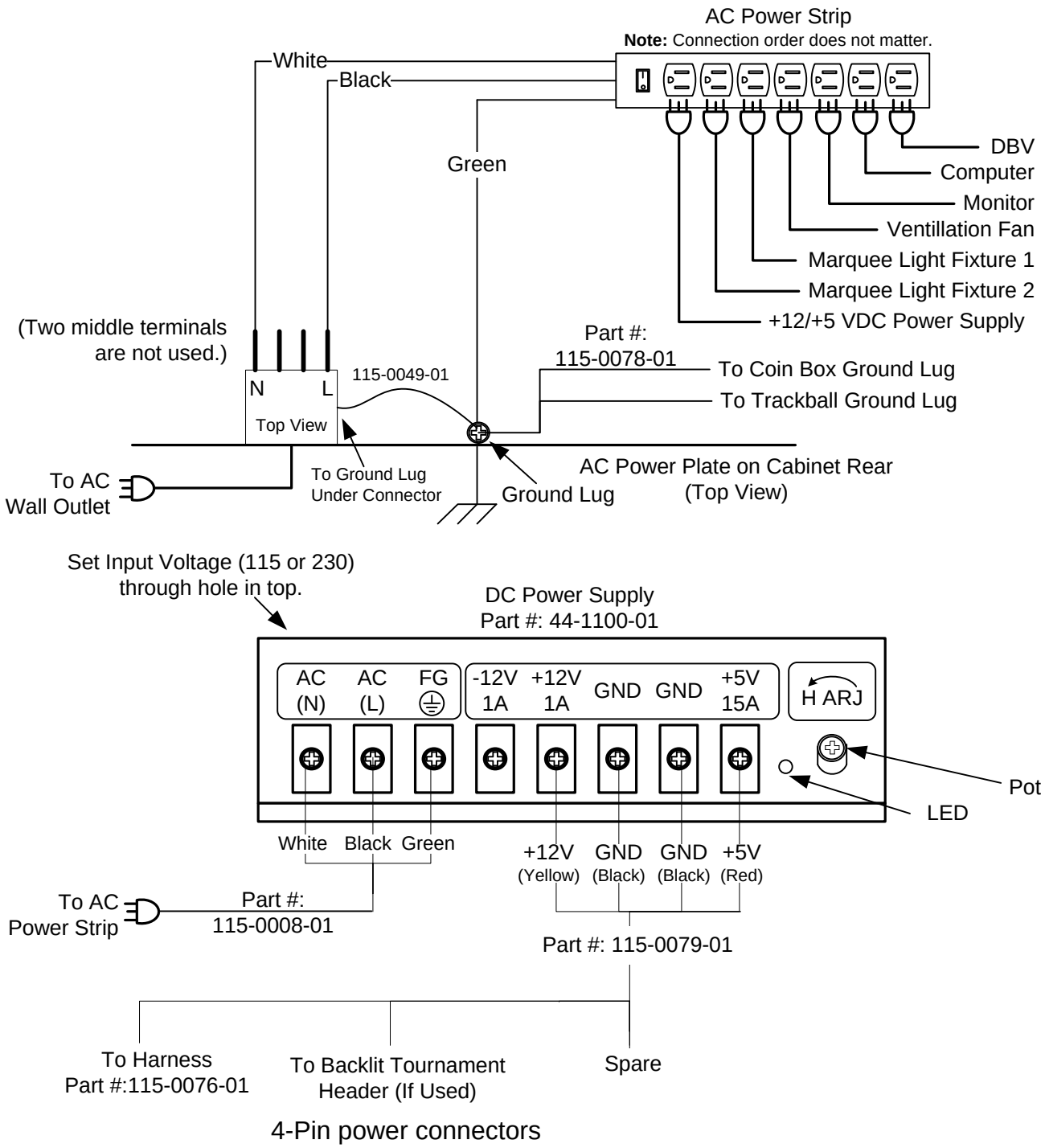
© 2012 GLOBAL VR Inc.