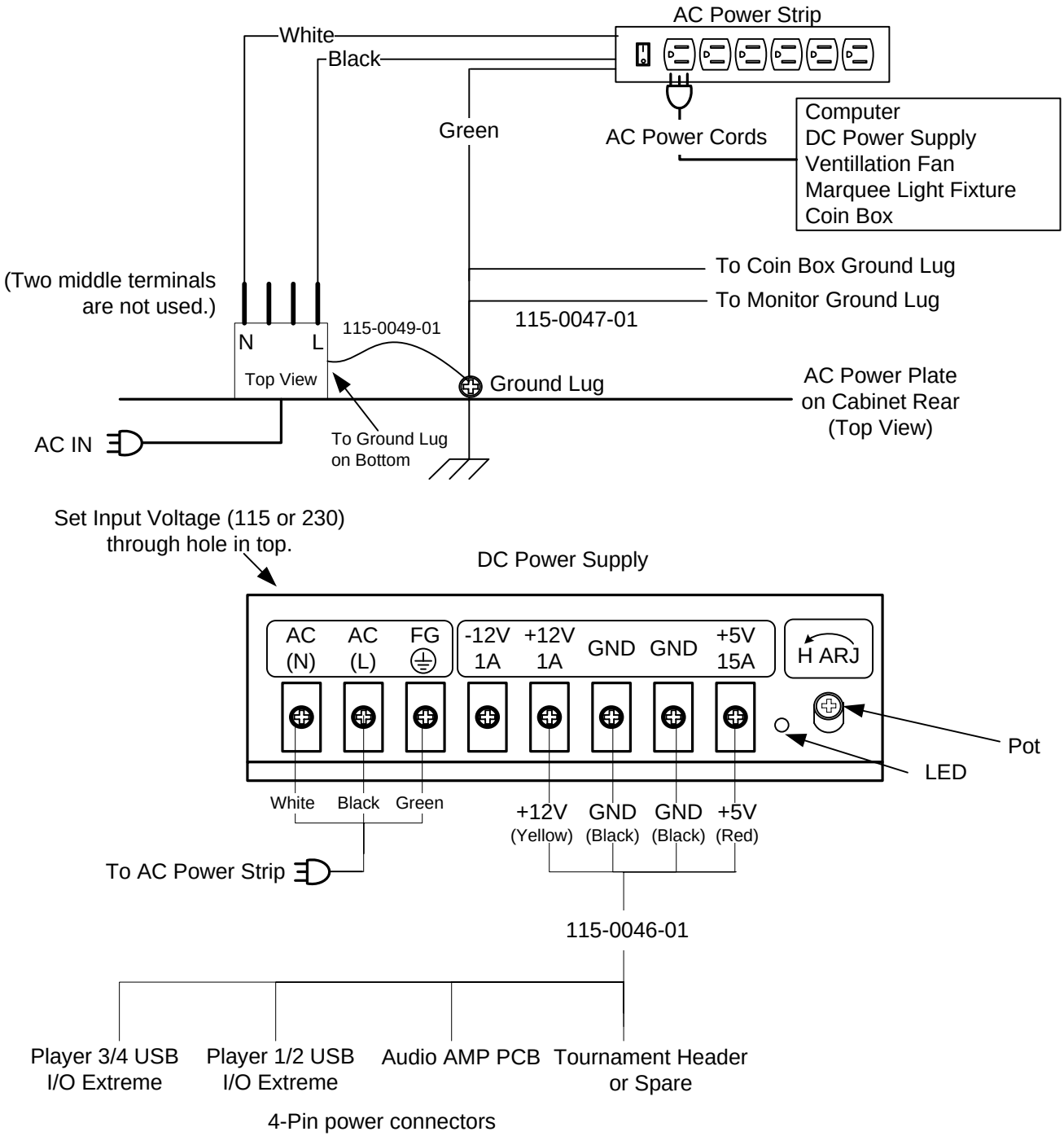

Power Distribution Diagram: EA SPORTS™ MADDEN NFL™ FOOTBALL

© 2004 GLOBAL VR®, INC.

041-0004-00 Rev. A 8/19/2004