Simplified I/O Wiring Diagram for Gun Games (Aliens, Frightfearland, Paradise Lost)

© 2012 GLOBAL VR Inc.

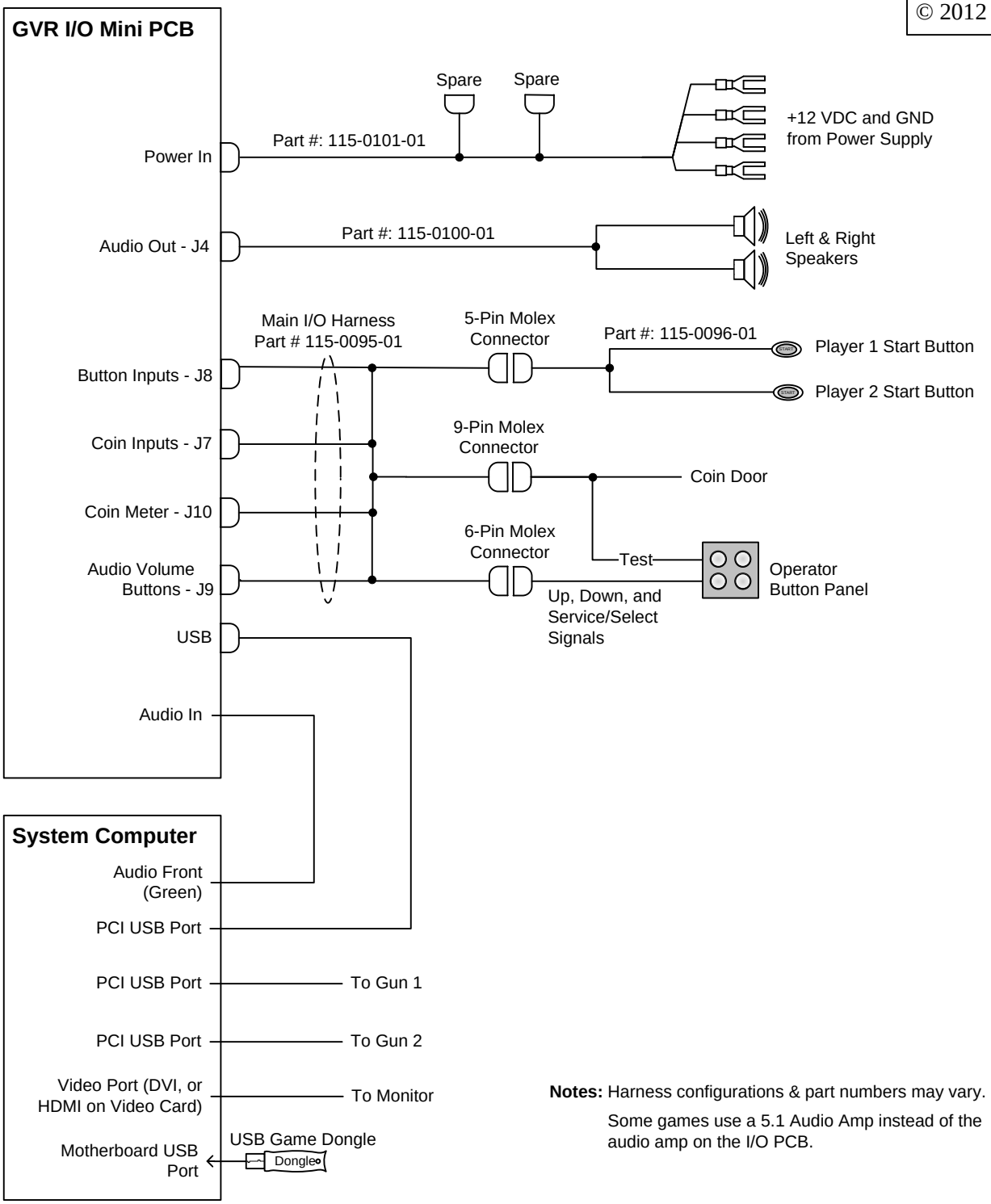

Notes: Harness configurations & part numbers may vary.

Some games use a 5.1 Audio Amp instead of the audio amp on the I/O PCB.