Frightfearland Universal Kit
Simplified Wiring Diagram

© 2012 GLOBAL VR Inc.

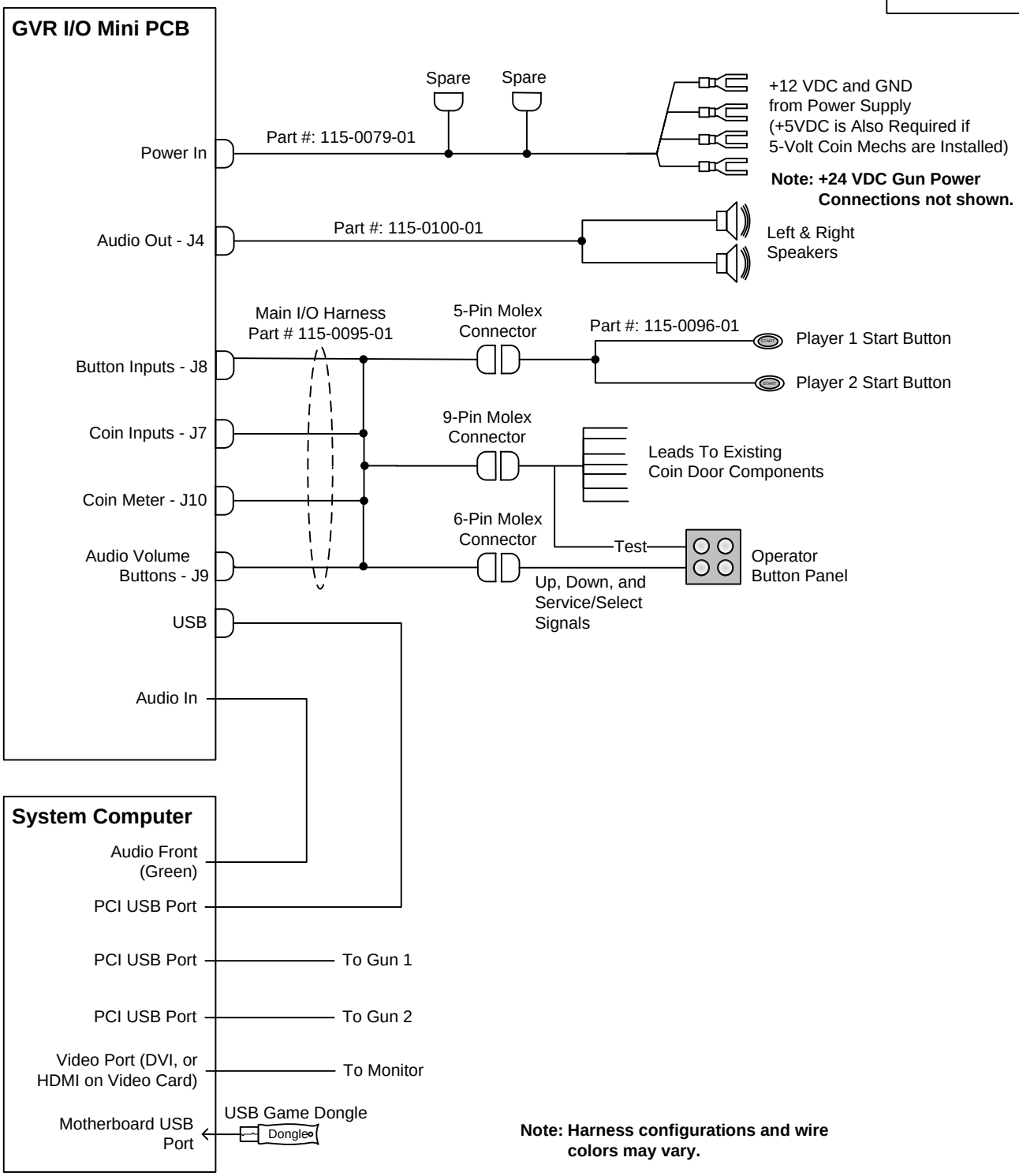

Note: Harness configurations and wire colors may vary.