Blazing Angels Deluxe Sit-Down
Simplified I/O Wiring Diagram

© 2012 GLOBAL VR Inc.

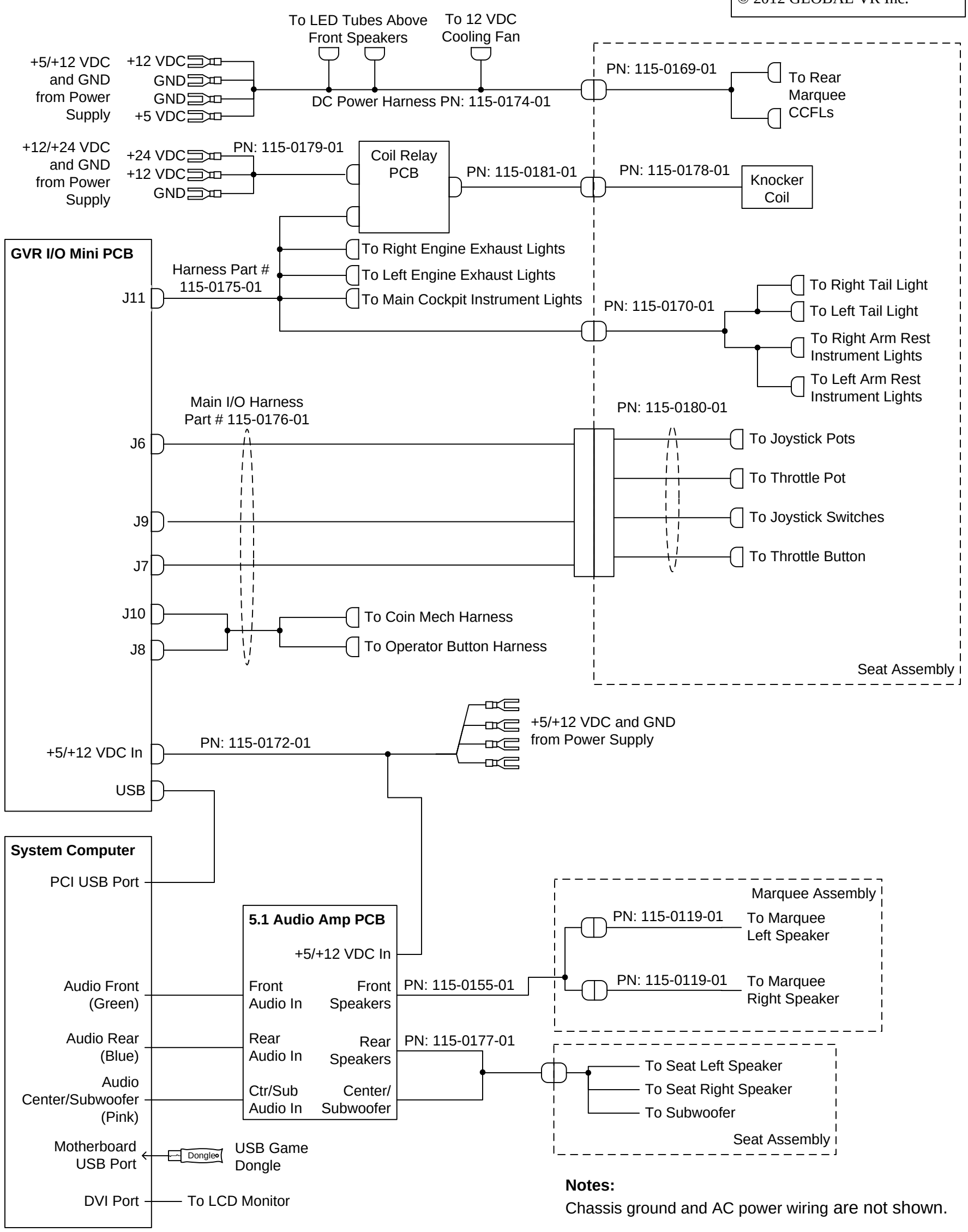

Notes:

Chassis ground and AC power wiring are not shown.