Blazing Angels Deluxe Sit-Down
Power Distribution Diagram

© 2012 GLOBAL VR Inc.

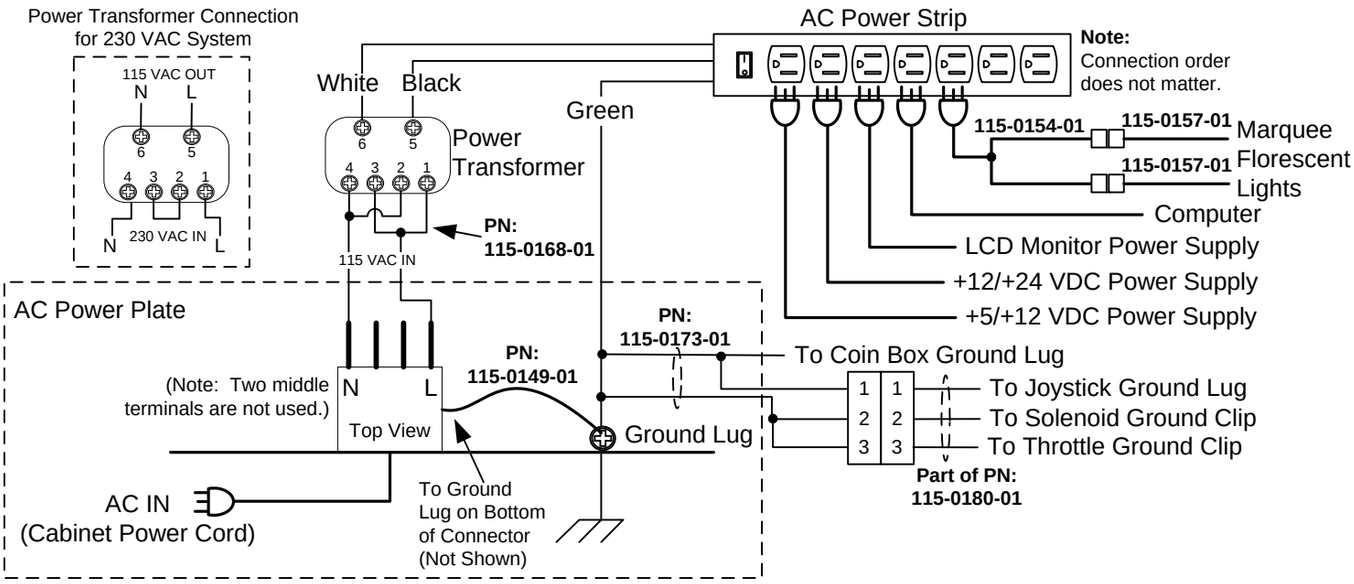

+5/+12 VDC Power Supply (PCBs, Lights, Fan)

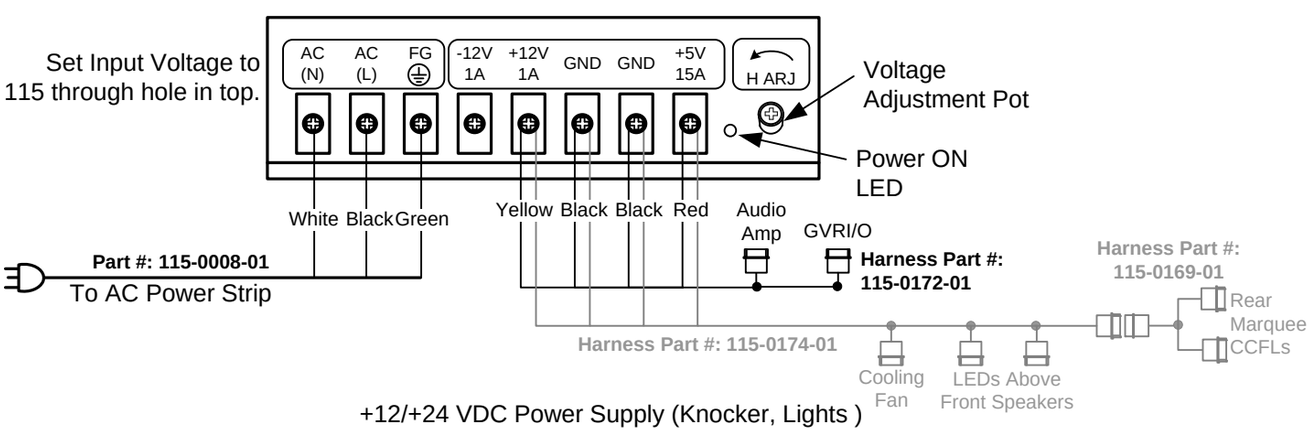

+12/+24 VDC Power Supply (Knocker, Lights)

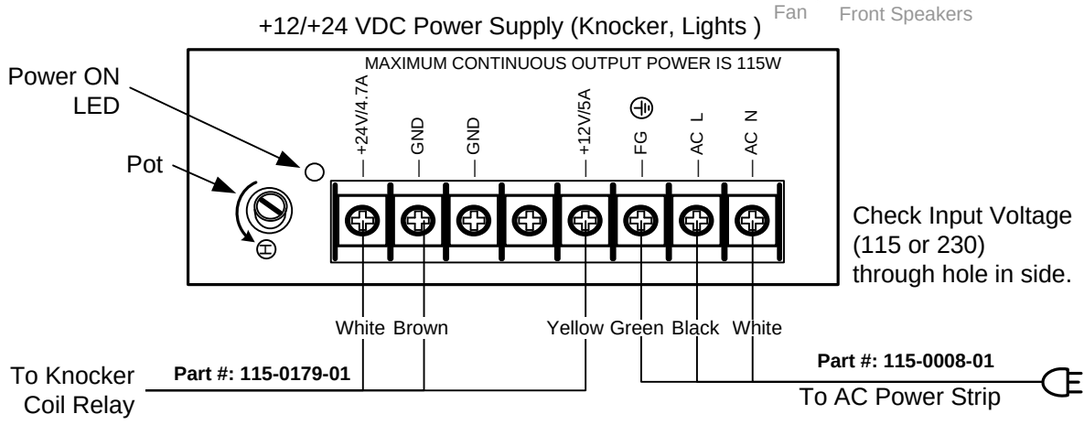
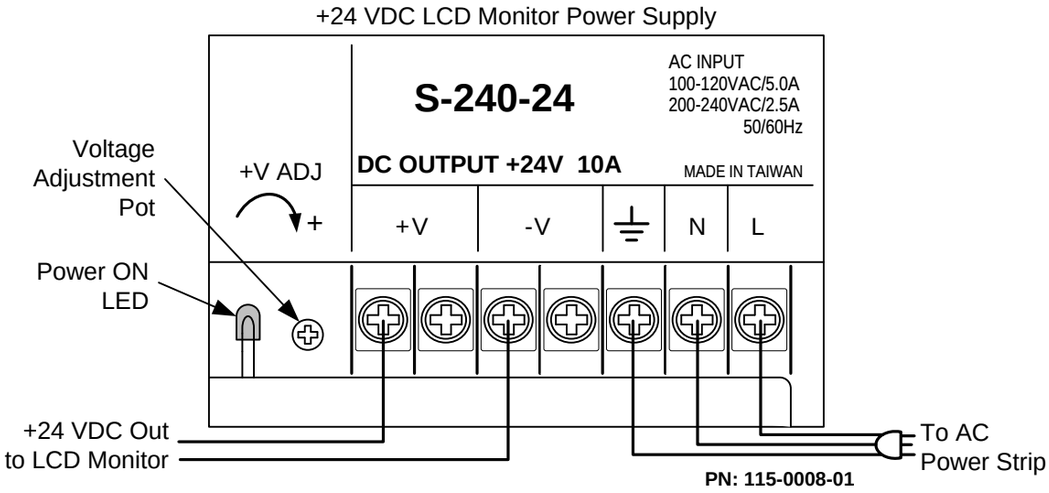
+24 VDC LCD Monitor Power Supply