America's Army
Detailed I/O Wiring Diagram

© 2012 GLOBAL VR Inc.

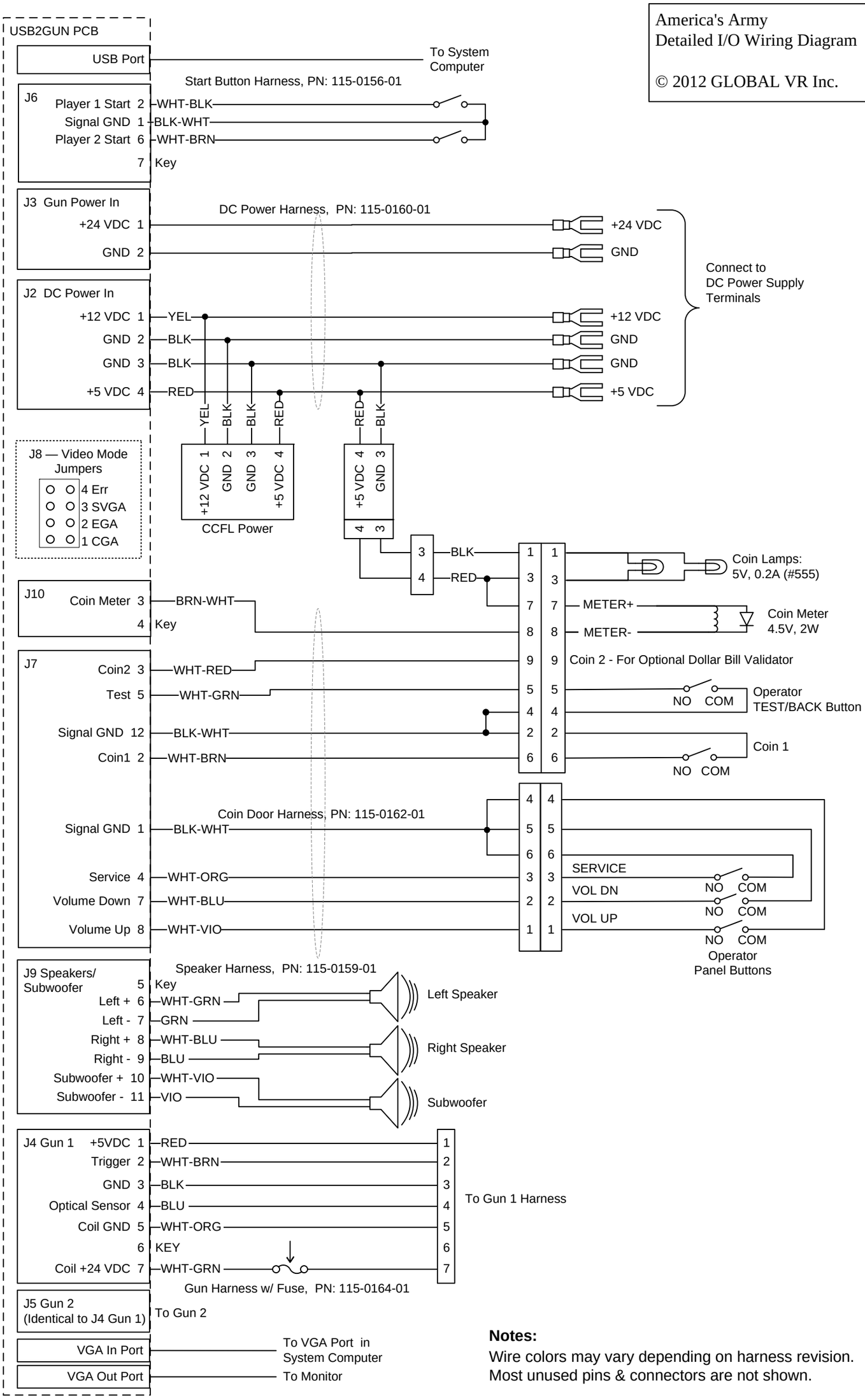

Notes:
Wire colors may vary depending on harness revision.
Most unused pins & connectors are not shown.